ZBA SERIES

ASSEMBLY INSTRUCTION

SIZE: TWIN/TWIN XL(01/02)

Notice: This instruction manual applies to twin/twin xl size.

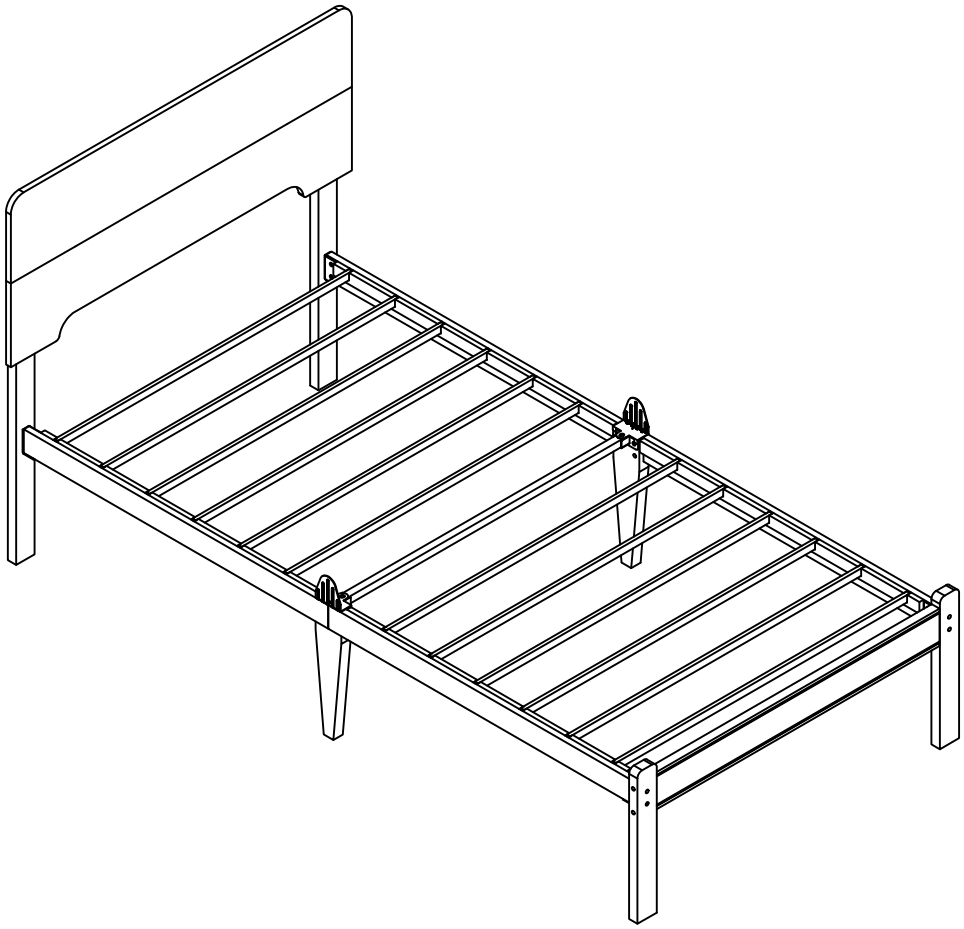

Excellent Customer Service-Please Contact Us Before Return Our Product!

All of our products have been tested before packed, but If any parts are missing or damaged, please contact us, we will reply to you ASAP. When replacing parts or hardware, please log in to your account and message the seller. It will better to include applicable photos or provide the part number and quantity.

PLEASE READ BEFORE ASSEMBLY

Read Before Beginning Assembly

1. Clearing a area: Please assemble in a spacious area near the product's final location, preferably on a carpet or protected surface to safeguard both your floor and the product.

2. Recommend team assembling: It is recommended that at least 2 people assemble this product. Having an extra hand can make the process faster and easier.

3. Check for all parts: Most parts are labeled or stamped on the raw edge. Ensure all parts are included before starting.

4. Read each step carefully: Follow the assembly steps in the correct order. Skipping steps or changing the sequence can lead to difficulties.

5. Tighten after complete: Do not fully tighten any bolts before the entire assembly is completed. Final tightening all together ensures greater stability.

6. You can contact us: If you encounter any questions or difficulties during installation, please contact us through marketplace.

Caution

1. Choking hazard: This product contains small parts. Keep them away from children under 3 years old. Children under 4 years old must be supervised by adults when near the bed.

2. Use power tools with caution: Overloading or improper operation of power tools can strip or damage parts and void the warranty.

Warranty Information

1. This product is warranted against defects in materials and manufacture for 3 years from the purchase date (proof of purchase required).

2. Warranty covers defective parts only. Assembly labor not included.

3. Not valid for misuse, improper assembly, alterations, or unauthorized repairs. No liability for consequential damages where permitted by law.

Parts&Hardware

1. This page lists all the items included in this package. Please identify the hardware and individual components before beginning assembly.
2. This model includes only the parts numbered above. Skipped numbers indicate that the part is not used on this model.

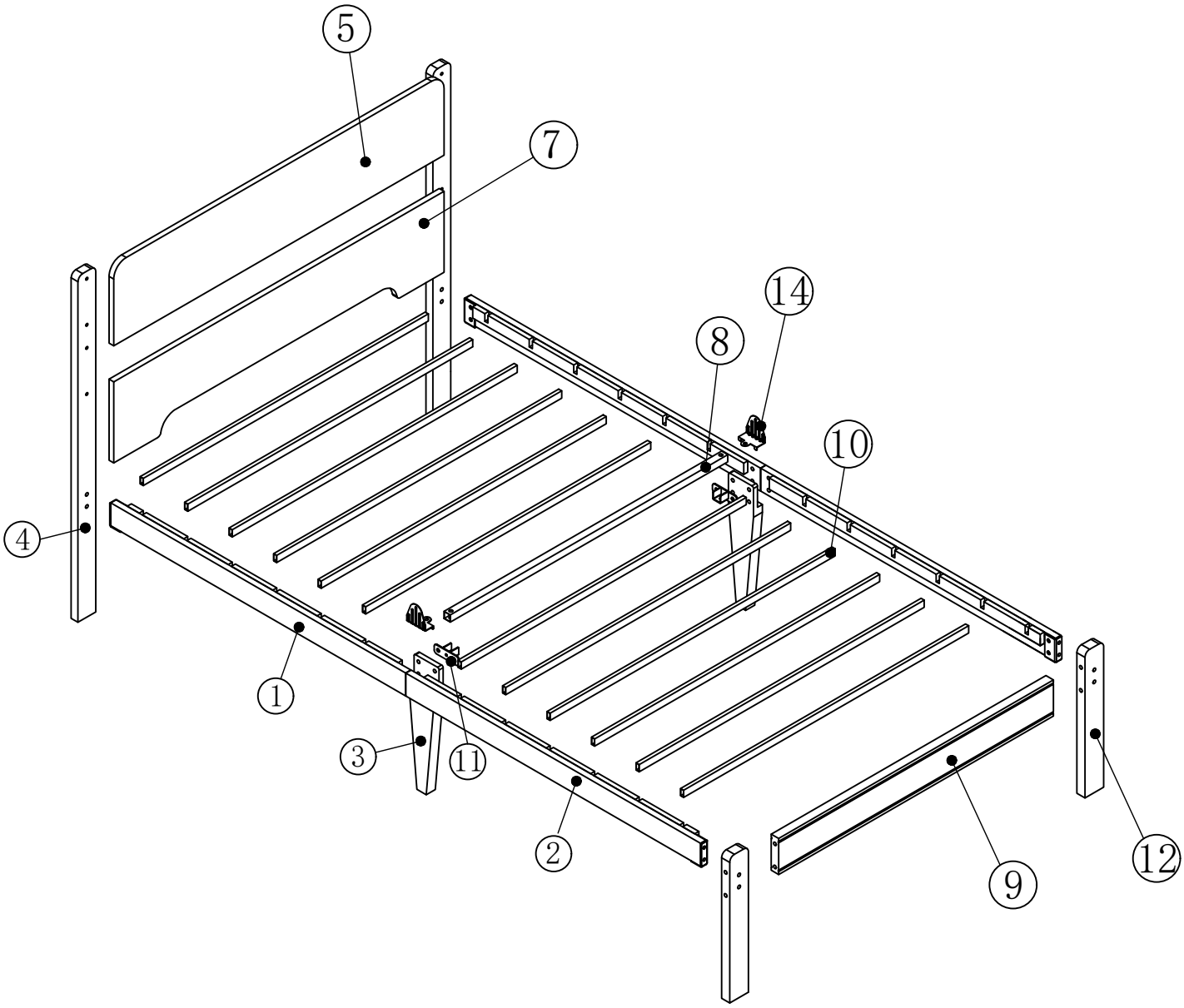

Parts&Hardware

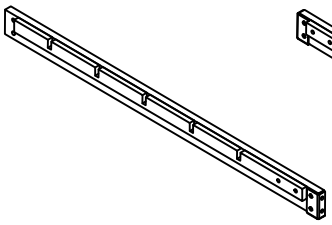

① Left Side Rail
2PCS

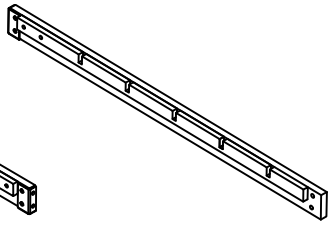

② Right Side Rail
2PCS

③ Side and Corner Posts
2PCS

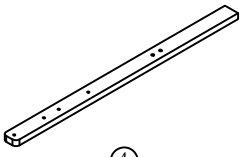

④ Bedposts
2PCS

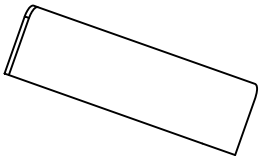

⑤ Headboard Panel-A
1PCS

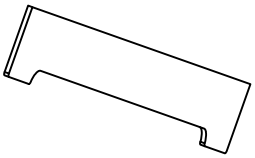

⑦ Headboard Panel-B
1PCS

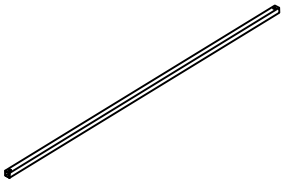

⑧ Center Support Bar
1PCS

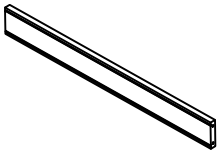

⑨ Side Bracket
1PCS

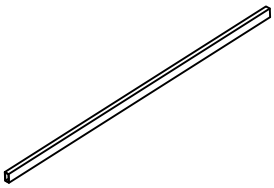

⑩ Slat
12PCS

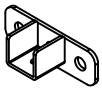

⑪ Connector-A
2PCS

⑫ Foot of Bed
2PCS

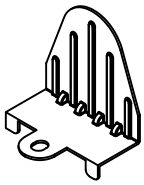

⑭ Mattress Gasket
2PCS

A×10PCS
M8*27
+1(spare)

B×8PCS
M8*36
+1(spare)

C×4PCS
M6*75

F×4PCS
M8

G×8PCS
M6*33
+1(spare)

Installation

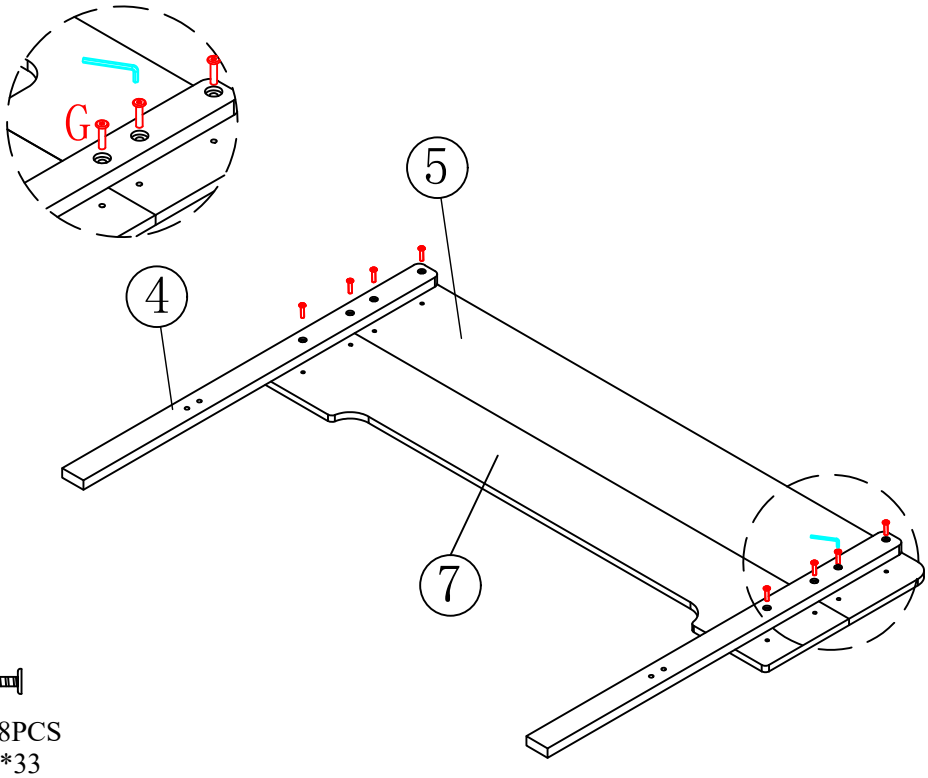

G×8PCS
M6*33

Step 1

Connect Headboard Panel

- Place headboard panel-A ⑤ and headboard panel-B ⑦ close together.
- Attach headboard panel-A ⑤ and headboard panel-B ⑦ to the headboard posts ④ using bolts (G).

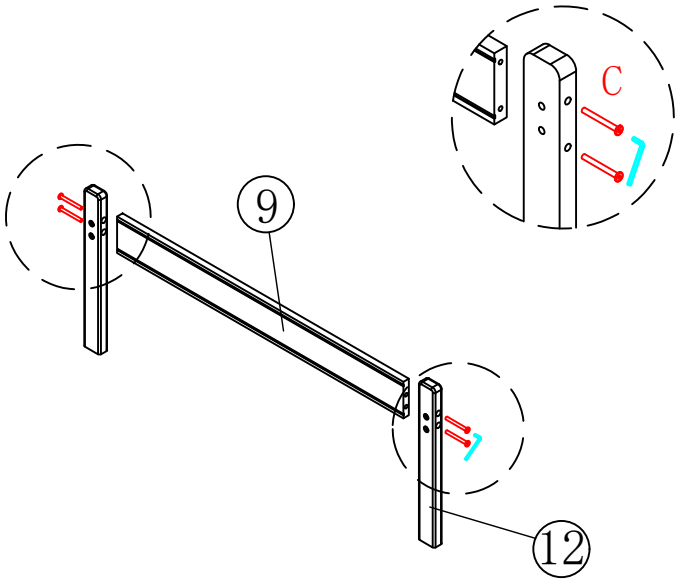

C×4PCS
M6*75

Step 2

Footboard Assembly

- Position the footboard ⑨ between the two foot of bed ⑫.
- Insert the bolts (C) through the pre-drilled holes as shown in the diagram and hand-tighten all bolts first to ensure proper alignment .

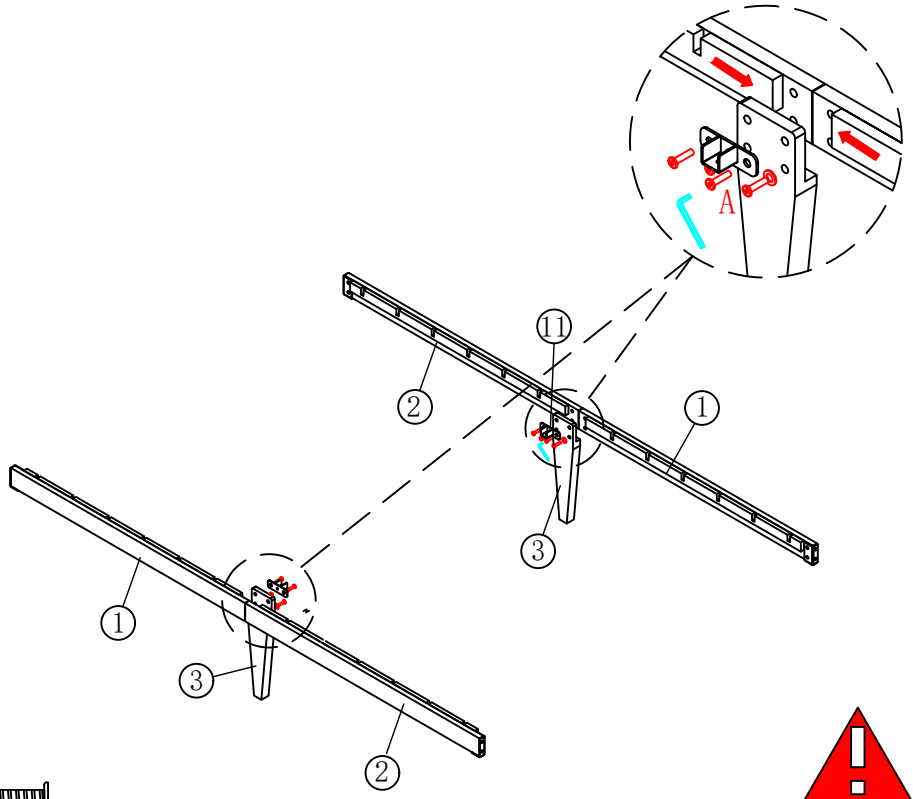

Step 3

Assemble of Side Rails

- Connect the left side rails ①, left side rails ② and Side and corner posts ③ using connectors-A ⑪ and eight bolts (A) and four washer (F). The washers should be installed to the bottom holes.

A×8PCS
M8*27

F×4PCS

Note: Follow the direction indicated by the red arrow in the detailed view for proper installation.⑪ It should be placed in the two screw holes above ③.

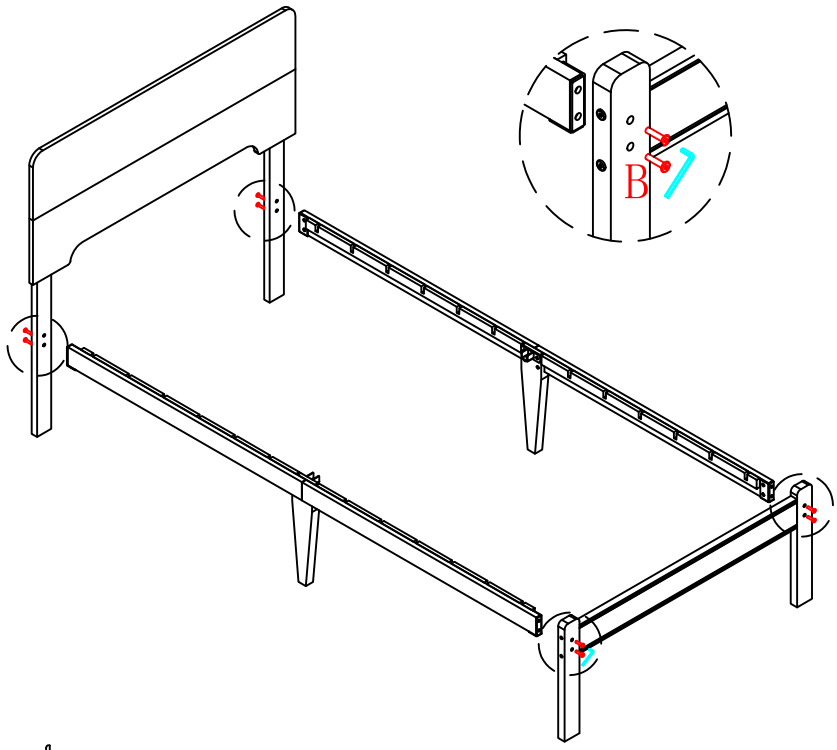

Step 4

Assemble the Bed Frame

- Align the mounting brackets on the side rails with the corresponding holes on both the headboard and side bracket.
- After all the bolts are in place, use the included hexagonal wrench to tighten bolts (B).

B×8PCS
M8*36

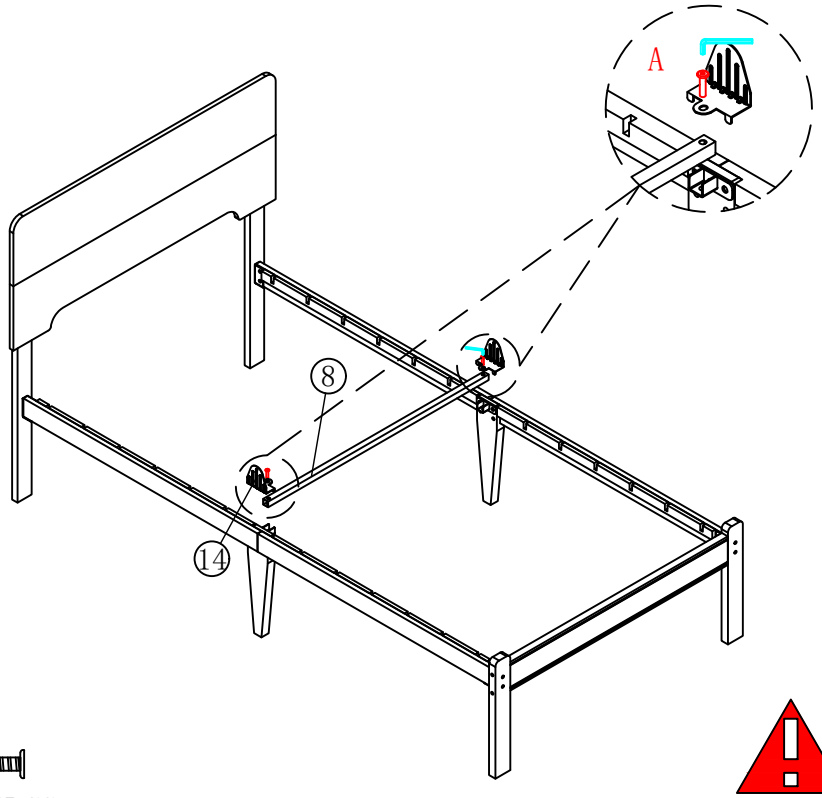

A×2PCS
M8*27

Step 5

Install the Center Support Bar

- Use bolts (A) to lock the center support bar ⑧ onto the center support rail .
- At the center, mattress gasket ⑭ can be optionally installed.
- After installation is completed, tighten all the bolts.

Note: Ensure all connections are properly aligned before final tightening. This step is crucial for the bed's stability.

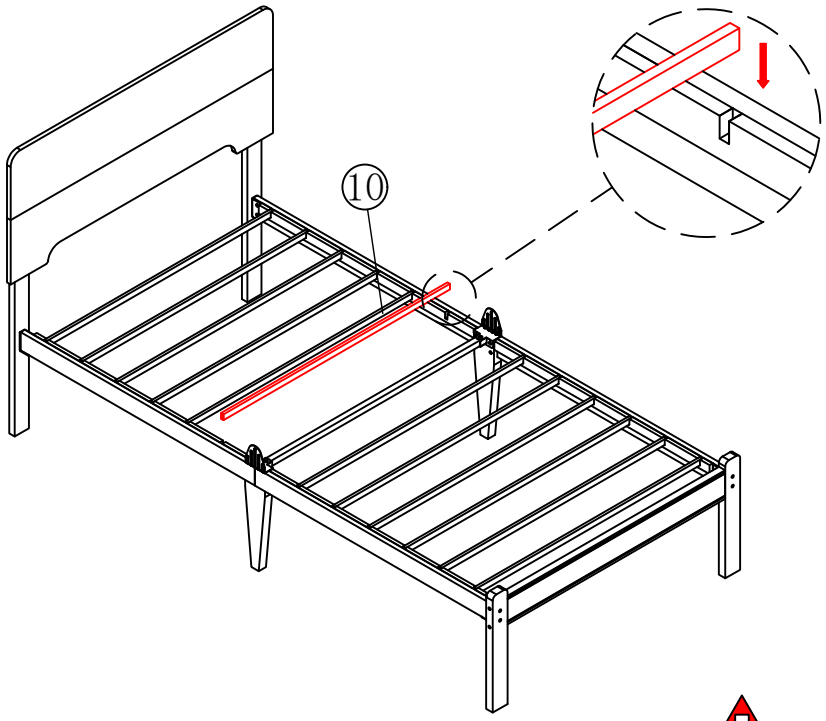

Step 6

Install the Bed Slats

- Place all bed slats ⑩ across the side rails.

Note: Before completing assembly, double-check that all screws and components are fully tightened.

IMPORTANT INFORMATION

Warning

1. **Age Restriction:** The bed is not designed for children under 4 years old.
2. **For your safety:** Jumping, rough play, or other vigorous activities on the bed are not recommended as they may cause injury or damage to the bed frame.
3. **Weight Limit:** The maximum combined weight on the bed should not exceed 1000 lbs.This includes the weight of the bed itself, mattresses,bedding, and people.
4. **Do not drag or push the bed frame:** Always use two people to lift and reposition the bed frame to avoid damage to the frame or the floor.

Cleaning&Care

1. **Cleaning method:** Use a dry or slightly damp soft cloth for cleaning. Avoid abrasive cleaners, which can damage the finish.
2. **Hardware maintenance:** Over time, hardware can loosen. Regularly check and tighten all connections to maintain the bed's stability and prevent damage.

Please keep these instructions for future reference!